Updated 9/25/2025

Mechanical Engineering Curriculum Map

(Solid Line Down Arrows indicate Pre-Requisite ↓) (Dotted Horizontal Arrows indicate Co-Requisite ·····▶)

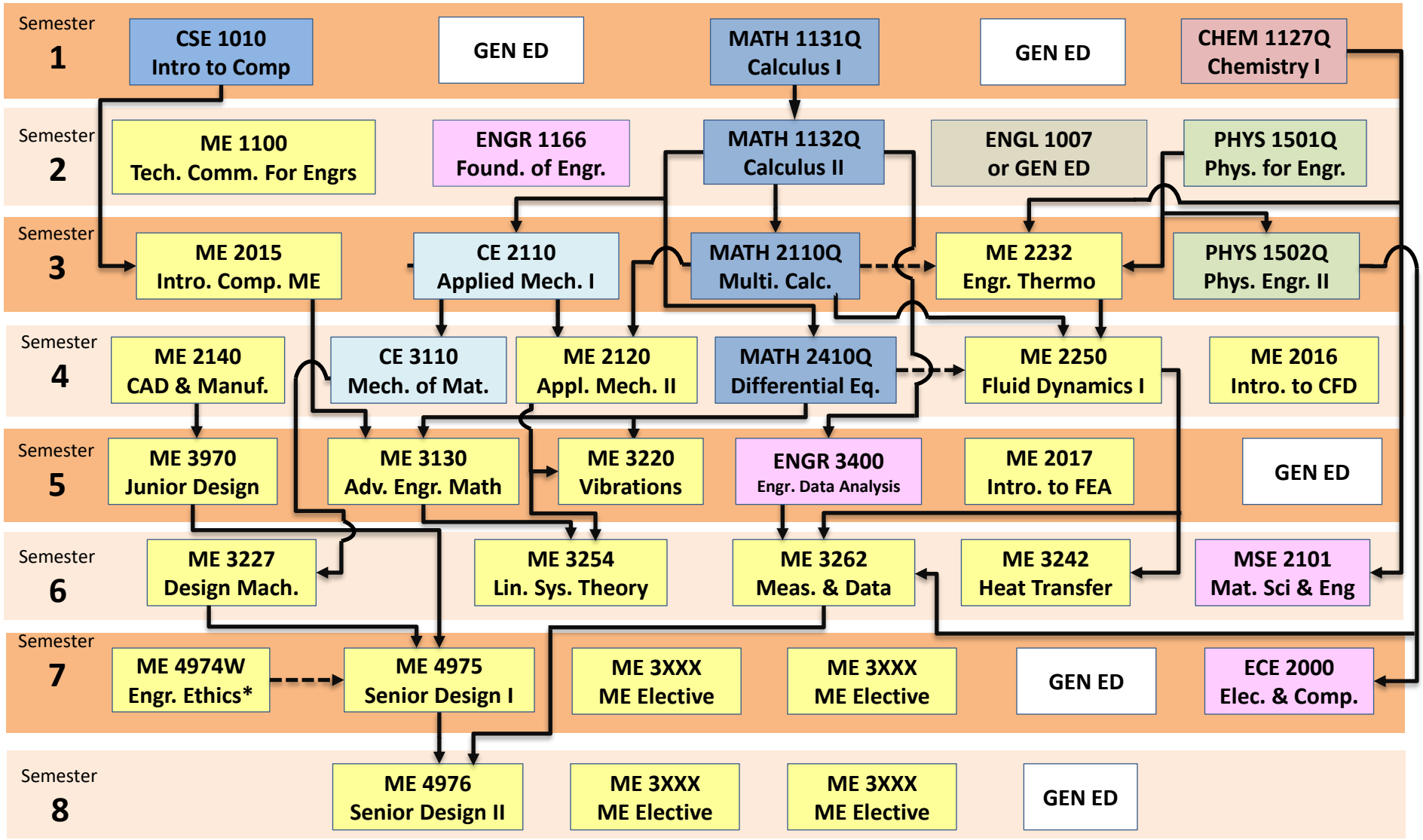

***4974W. Ethics for Engineers** - **Prerequisites**: ENGL 1007 or ENGL 1010 or ENGL 1011 or ENGL 2011 & **Corequisite**: ME 4975

You must meet with your academic advisor at least once every semester to ensure you are making satisfactory progress towards your degree.